Pressure Sensor Fluid PSS-250R

- Application: 0 to 250 bar
- Response time: 1.5 ms
- Pressure reference type: Relative
- Power supply: 5 V
- Weight: 45 g

This sensor is designed to measure the pressure of media in relation to the ambient pressure (e.g. Diesel, gasoline, water, engine oil, transmission oil or air). The sensor is available for two different supply voltage ranges.
The sensor uses stainless steel measuring cells with piezo-resistive measuring bridges in thin layer technique, which are hermetically welded together with stainless steel pressure ports. This guarantees a complete media compatibility.
The main benefit of this sensor is the high quality of a production part at a low price

Application

Application	0 to 250 bar (r)
Pressure reference type	relative
Max. pressure	500 bar
Operating temp. range	-40 to 125°C (140°C)
Media temp. range	-40 to 125°C (140°C)
Storage temp. range	-20 to 50°C
Bio fuel compatibility	E 85 / M 100
Max. vibration	100 m/s^2 rms at 10 to 2,000 Hz

Technical Specifications

Mechanical Data

Male thread	M10x1
Wrench size	17 mm
Installation torque	15 Nm
Weight w/o wire	45 g
Sealing	O-ring 7.65 x 1.63 mm

Electrical Data

Power supply U_S	4.75 to 5.25 V
Max power supply U_S max	± 30 V
Full scale output U_A	10 to 90 % U_S ratiometric
Current I_S	8 mA

Characteristic

Response time T10/90	1.5 ms
Compensated range	0 to 90°C
Tolerance (FS)	± 2.5 bar
Tolerance (FS)	± 1 %
Sensitivity	16 mV/bar at U_S = 5 V
Offset	500 mV at U_S = 5 V

Connectors and Wires

Connector	Bosch Compact
Mating connector	3-pole Compact D261.205.339-01
Pin 1	Gnd
Pin 2	Sig
Pin 3	U_S
Pin 4	-
Pin 5	-

Installation Notes

The PSS-250R can be connected directly to most control units.

The sensor has a protection for over voltage, reverse polarity and short-circuit.

Please do not fix the sensor directly to the engine block to avoid undesired strong vibrations.

Each mounting orientation is possible.

The sensor meets all EMV, EMC and ESD automotive standards.

Please find further application hints in the offer drawing and free download of the sensor configuration file (*.sdf) for the Bosch Data Logging System at our homepage.

Safety Note

The sensor is not intended to be used for safety related applications without appropriate measures for signal validation in the application system.

Legal Restrictions

Generally blocked are direct and indirect business involving high risk destinations, including Russia, Belarus, Cuba, Iran, North Korea, Syria, Libya, Afghanistan, and certain non-governmental controlled Ukrainian regions. This list may change as geopolitics evolve.

Ordering Information

Pressure Sensor Fluid PSS-250R
4.75 to 5.25 V
Order number **B261.209.965-01**

Dimensions

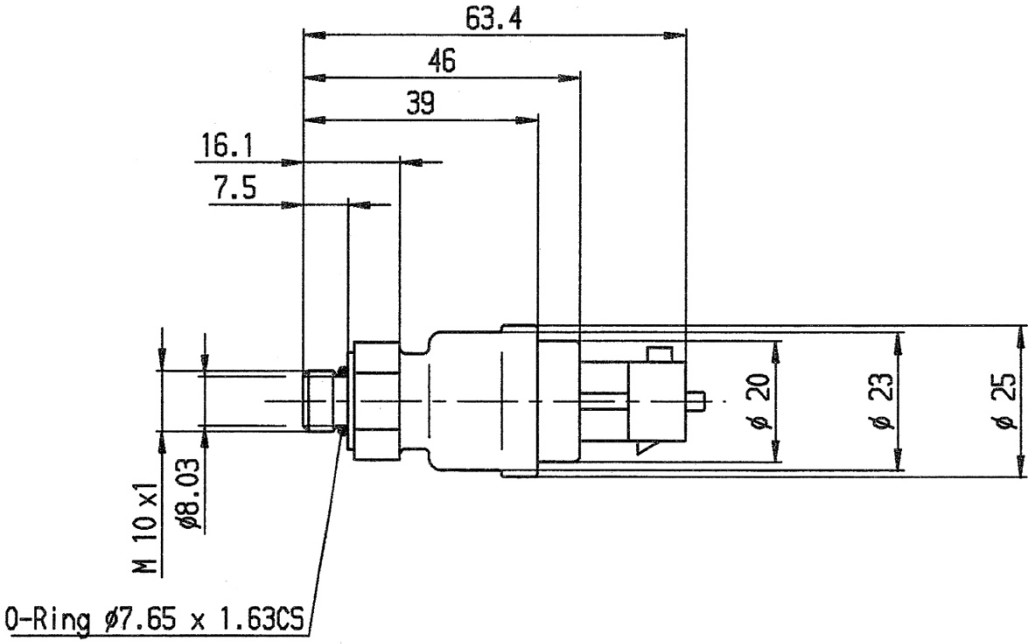

Represented by:

Europe:
Bosch Engineering GmbH
Motorsport
Robert-Bosch-Allee 1
74232 Abstatt
Germany
motorsport@bosch.com
www.bosch-motorsport.de

North America:
Bosch Engineering North America
Motorsport
38000 Hills Tech Drive
Farmington Hills, MI 48331-3417
United States of America
motorsport@bosch.com
www.bosch-motorsport.com

Asia-Pacific:
Bosch Engineering Japan K.K.
Motorsports Department
1-9-32 Nakagawachuo, Tsuzuki-ku
Yokohama-shi
Kanagawa, 224-8601
Japan
motorsport@jp.bosch.com
www.bosch-motorsport.jp

Australia, New Zealand and South Africa:
Robert Bosch Pty. Ltd
Motorsport
1555 Centre Road
Clayton, Victoria, 3168
Australia
motor.sport@au.bosch.com
www.bosch-motorsport.com.au

© Bosch Engineering GmbH 2026 | Data subject to change without notice
52563979 | en, 1, 27. Jan 2026